DUKERS
Quality Commercial Refrigeration

3 YEARS PARTS & LABOR
PREMIUM
WARRANTY
5 YEAR COMPRESSOR

PIZZA PREP TABLE

DPP44-6-S1

Single Door

TECHNICAL SPECIFICATIONS

Voltage/Frequency	115V/60Hz
Refrigerant	R290
Type of Defrost	Automatic
Interial Material	Stainless Steel
Exterior Material	Stainless Steel
Temperature Range °F	33 ~ 41°F
Compressor Power (HP)	1/5
Nema Config.	NEMA5-15P

PRODUCT FEATURES

- The compressor is mounted in the back and placed in the coolest possible area; this makes it easily accessible for servicing.
- Digital temperature controls with LED display for precise adjustment and automatic defrosting system.
- Temperatures in the cabinet range from 33 to 41 degrees Fahrenheit
- Higher Resistance to dust, high quality condenser.
- R290 Natural Refrigerant promotes faster cool down and efficient energy consumption.
- Self-closing doors at 60° with stay open feature.
- Stainless steel interior & exterior, sealed interior floors, and rounded cabinet corners for easy cleaning.
- 6" deep 1/3 plastic plan included.
- High quality coated stainless adjustable shelves prevent peel and rust.
- Lifetime warranty on hinges.
- 5" casters with lock for easy mobility.

HIGH QUALITY STAINLESS STEEL & ROBUST DESIGN

DUKERS
Los Angeles | San Francisco | Dallas
Houston | Florida | Chicago | New Jersey

1-800-931-8628
info@dukersusa.com
www.DukersUSA.com

DETAILS & SPECIFICATIONS

PIZZA PREP TABLE DPP44-6-S1

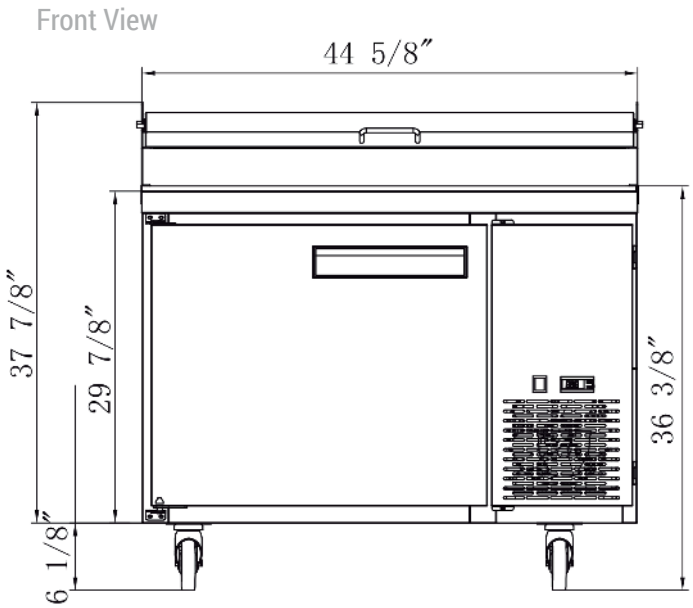

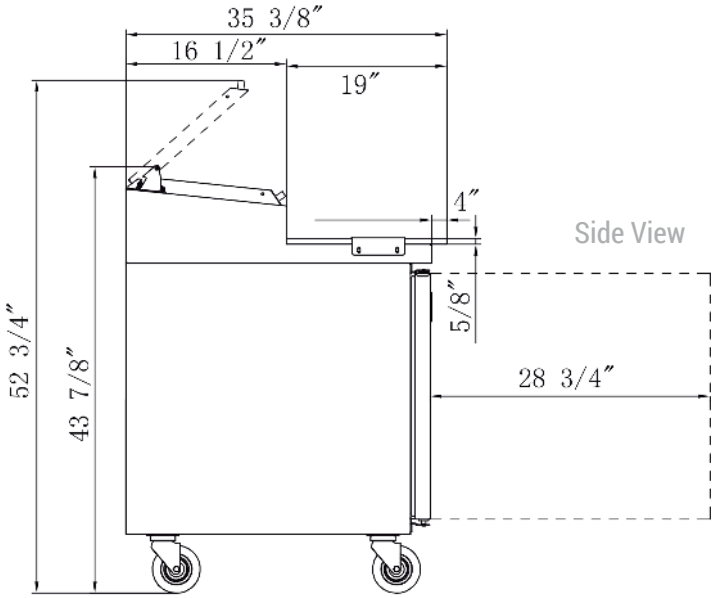

MODEL DPP44-6-S1	
Rated Voltage	115V
Rated Frequency	60Hz
Total Input Power	250W
Total Current	2.2A
Total Capacity	9.88 cu ft
Climatic Category	4-5
Protection Type	I
Design Pressure High Side	300 PSIG
Design Pressure Low Side	150 PSIG
Insulation Blowing Gas	C-Pentane
Refrigerant	R290/3.7 oz

1/3 PAN COUNT: 6

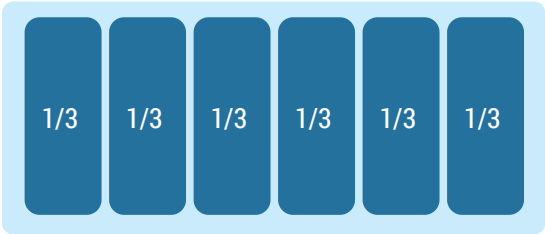

MODEL	EXTERNAL DIMENSION WXDXH (INCHES)	PACKAGING DIMENSION WXDXH (INCHES)	PRODUCT NET WEIGHT	# OF SHELVES	40HQ CONTAINER CERT.
DPP44-6-S1	44 1/4 x 31 1/2 x 43 7/8	46 1/8 x 35 7/8 x 48 3/8	224	1	46

NATURAL REFRIGERANT

PROUD MEMBER CFESA Commercial Food Equipment Service Association

Intertek

Intertek

115/60/1
NEMA-5-15P

DUKERS

Los Angeles | San Francisco | Dallas
Houston | Florida | Chicago | New Jersey

1-800-931-8628
info@dukersusa.com
www.DukersUSA.com